Lucrări ştiinţifice **Zootehnie şi Biotehnologii**, vol. **40(2), (2007**), Timişoara.

QUALITY ASSESSMENT OF FRESH AND REFRIGERATED CULTURE STURGEON MEAT

EVALUAREA CALITĂŢII CĂRNII STURIONILOR DE CULTURĂ ÎN STARE PROASPĂTĂ ŞI REFRIGERATĂ

PALTENEA ELPIDA *, TALPEŞ MARILENA *, IONESCU AURELIA **, ZARA MARGARETA **, VASILE AIDA **, MOCANU ELENA *

**Institute of Research and Development for Aquatic Ecology, Fishing and Aquaculture Galati, România*
***Faculty of Food Science and Engineering Galati, "Dunărea de Jos" Galati, România*

In order to assess the physical, chemical and biochemical modifications at the culture stellate sturgeon and beluga sturgeon meat, preserved through refrigeration, there have been determined the anatomo-ponderal characteristics, the nutritional constituents, and the effect of proteolytic enzymes by assessing the nitrogen compounds. At the age of 18 months with an average mass of 652.5 g% the chemical composition of the culture stellate sturgeon meat indicates a high content of water (77,8%), an average one of proteins (16.70%), and a low content of lipids (3.90%), the ash percentage being kept low and constant. In the case of the culture beluga sturgeon we have found a high content of water (84.12%), a relatively high content of proteins with biological value (14.98%) and a low content of lipids (1,1%). After 8- day storage of stellate sturgeon and a 12 - day storage of beluga sturgeon, the juvenile sturgeon proved a good stability during refrigeration and storage, showing no obvious signs of biological degradation.

Key words: culture sturgeon, stellate sturgeon (*Acipenser stellatus* Pallas, 1771), beluga sturgeon (*Huso huso* Linnaeus, 1758), proteins, aminoacids, nitrogen fractions, refrigeration.

Introduction

The commercial importance of Acipenserides has determined the great interest in sturgeon biology (Binkowski & Doroshov 1985, Williot 1991, Gershanovich & Smith 1995), especially in their systematic and evolution (Bemis, and al., 1997) and the protection of the certain species (CITES/1 April 1998, rules which drastically limit the sturgeon commerce, an important source of diet meat and valuable black roes).

Sturgeons are known and appreciated by consumers for the quality of their meat and especially of the caviar. The fish meat, including the sturgeon is

appreciated for its dietary value derived from the content of n-3 and n-6 fatty acids which go into the composition of cell membranes and play an important role in the preservation of cardiovascular diseases.

As the last decade has registered an increased use of the technologies of sturgeon breeding based on intensive system, the sturgeon meat derived from fish farms represents a new offer on the international and EU markets.

If the fish is not preserved by means of one of the methods of preservation, such as: chilling, keeping in the ice, freezing, etc., the nutritive value of the meat decreases gradually so that, in state of advanced decomposition the fish meat becomes toxic. The main cause that makes fish get deteriorated is the activity of contaminant microorganisms to which the autolysis processes are added. Avoidance of fish meat degradation is achieved by using appropriate methods of preservation.

Our study had the goals of estimation the technological and consumption value of the culture of sturgeons meat; the study of the physical, chemical and biochemical characteristics of the sturgeons meat; the measuring of the loss in quality of the meat during refrigeration and refrigeration storage.

Materials and Methods

The biological material under study consisted of culture sturgeons from the species *Acipenser stellatus* Pallas, 1771 (stellate sturgeon) witch the average mass/fish of 652,5g and *Huso huso* Linnaeus, 1758 witch the average mass/fish of 201,5g.

The live culture of sturgeons, coming from the fish farm Brates, Galati. The humidity, protein and fat contend were determined in concordance with the AOAC 1990 recommendations.

Immediately after catch, the specimens of culture sturgeon were processed and examined in state of first freshness aiming at the ponderal anatomy characteristics, and the physical, chemical and biochemical analysis.

In order to assess the modifications occurred in the sturgeon meat in conditions of chilling preservation, there were collected samples which were stored at cooling temperature (4^0C) until the sensorial indicators of meat degradation appeared. The cooled samples were examined every other day.

The content of free amino acids, non-protein nitrogen, were determined in accordance with the methods indicated by Ionescu (1992), just as the fractionation of proteins, the pH was potentiometrically determined using the Hanna type pH-meter. The chemical reactive were of analytical purity.

Results and Discussions

The investigations performed were aimed at estimating the modifications of the physical, chemical and biochemical indicators which occur in the meat of the culture sturgeons immediately after catch and in conditions of cooling preservation.

The technological and consumption value of the culture sturgeon

The culture stellate sturgeon samples aged 18 months have the mass ranging between 0.555 kg and 0.750 kg.

The statistical analysis of the anatomical ponderal characteristics shows that the average percentage values of the culture stellate sturgeon for the head (26.76%), viscera (7.3%), skin (14.95%) and fins – 4.75 % are close or sometimes lower than the results reported on other species of sturgeon (Table 1, fig. 1).

Table 1

Ponderal anatomy of stellate sturgeon samples (*Acipenser stellatus)*

Sample	**Fish weight g**	**Fillets**	**Head**	**Viscera**	**Fins**	**Skin+ shields**	**Notochord+ losses at filleting**
		%	%	%	%	%	%
1	750	46.7	26.0	6.7	2.7	12.6	5.3
2	675	43.3	25.4	6.0	2.7	15.1	7.5
3	730	43.5	27.5	7.0	3.0	12.3	6.7
4	580	35.7	27.5	7.7	6.0	14.1	9.0
5	555	25.3	28.4	8.4	7.4	18.9	11.6
6	625	33.5	25.8	8.0	6.7	16.7	9.3
Average	652.5	38.0	26.7	7.3	4.7	14.9	8.4

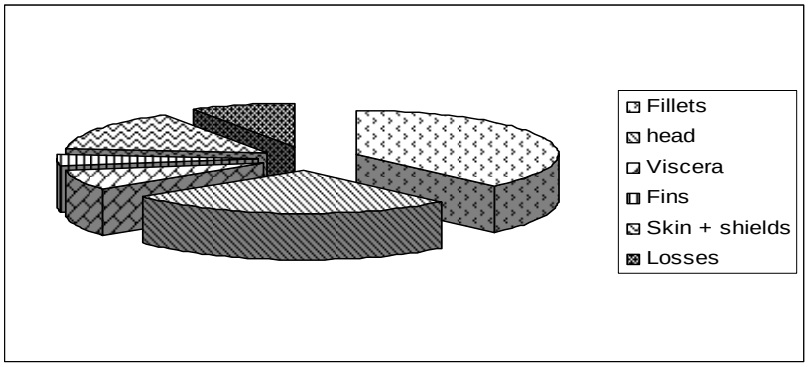

Figure. 1 The ponderal average of the organs of stellate sturgeon

The determinations concerning the technological and consumption value have been conducted on a culture of sturgeon *(Huso Huso* juveniles) of 1 year of age .The establishing of the edible part relative to the whole fish has been done quite accurately. seeing as the rather small dimensions of the sturgeon samples, with morphological characteristics still developing . The mass of the fish samples varied in extremely wide ranges, from 152g to 272g (table 2, fig. 2), for the population of sturgeon of the same age , which

benefited from similar maintenance conditions and the same quality of environment and food.

The beluga sturgeon specimens studied here in, a year old, have led to manual processing yields of 42.6-58.2 %, a percentage that is similar to those seen in cyprinids, with the mass varying between 1.3-3.0 kg, but smaller than those in salmonidae to which the processing yields are at 75%.

Table 2.

Ponderal anatomy of beluga sturgeon samples (*Huso huso)*

Sample	**Fish weight g**	**Fillets**	**Head**	**Viscera**	**Fins**	**Skin+ shields**	**Noto-chord**	**Blood, losses**
		%	%	%	%	%	%	%
1	243	29.8	26.5	10.5	4.8	14.4	8.1	5.9
2	215	26.9	31.7	10.5	4.7	14.3	8.6	3.2
3	159	29.5	32.5	7.97	4.0	14.7	6.9	3.2
4	160	24.1	34.1	13.7	5.0	12.4	7.3	3.4
5	231	25.4	34.7	7.74	4.2	16.9	6.8	4.2
6	189	31.8	28.7	10.3	4.9	8.79	7.3	8.2
7	152	29.0	30.5	10.2	5.4	16.3	6.8	1.7
8	269	36.2	24.6	7.45	4.6	15.5	8.5	3.0
9	155	32.1	28.1	9.88	4.5	13.0	6.8	5.6
10	189	24.4	28.2	13.4	5.0	18.1	8.1	2.8
11	184	28.1	28.4	12.6	4.6	15.0	7.8	3.5
12	272	32.5	23.9	14.6	4.3	14.9	6.6	3.2
Average	201.5	29.2	29.3	10.8	4.6	14.6	7.5	4.0

The growth in corporal mass, as a bioproductive indicator, comes as a specific feature for each particular fish, which behaves differently in competition fir fodder and in regards to the efficiency of the conversion of utilized fodders into muscular mass. In the reticulated growth system the large density of the population may explain, in part, the different development of the specimens, assuming that an adequate management of operation and control of the water quality and miniaturization equipment, the quality of the fodder, the cycles of feeding. Generally, the technological value of the fish is assessed by determining the preliminary processing yields within the meat and the qualitative features of the meat and by products.

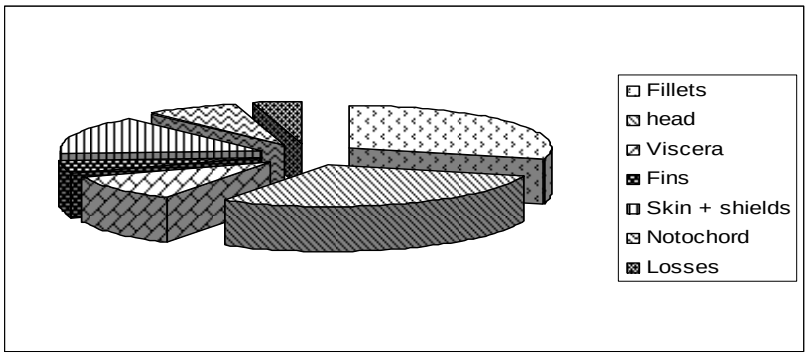

Fig. 2 The ponderal average of the organs of beluga sturgeon

As for the stellate sturgeon specimens under our study with the average mass/specimen of 0.652 kg, the meat percentage is 39% on the average (figure 3).

The meat yields of beluga sturgeon as observed in figure 4 have depended on the mass of the specimen, raging between 24.09-35.86 %.

The lowered technological value of the great sturgeon may be justified by the young age and by the long cycle of evolution, the yield of the edible part of the fish being generally dependent on the species, constitution and age of the fish, there for on the size and maturity of it.

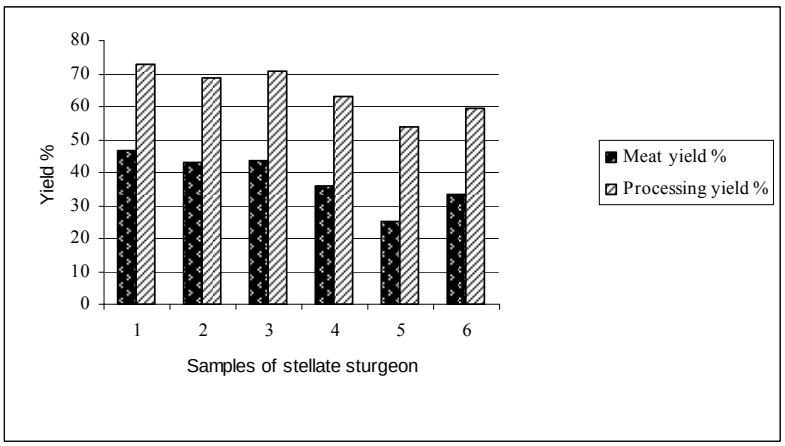

Fig. 3 The influence the fish mass on the yield (*A. stellatus*)

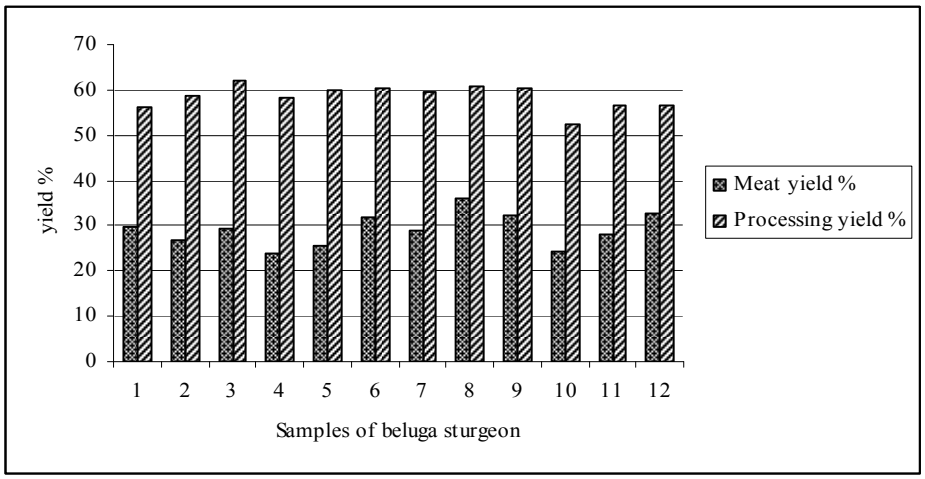

Fig. 4 The influence the fish mass on the yield (*H. huso*)

According to Mel, et all., 2001, the weight of the Acipenser ruthenus and Acipenser baerii file was at 40±1 % and 42±3.6 %.

The data analysis concerning the weight of different organs and component parts of the culture sturgeon have show a great dispersion of the values for meat, head and fins, motivated both by the premature stage of growth and by the difficulties in separating, the strong grip of the skin on the cartilage, the fragility of the notochord, the non-differentiation net of the abdominal musculature, the modification of the meat consistency when deposited under refrigeration conditions along with the encumbering of the separation process.

The medial percentile values for the head 29.3 %, 10.8% viscera, 14.6 % skin + shields and 4.6% fins for great sturgeon and values for the head 26.7%, 7.3% viscera, 14.9% skin + shields and 4,7% fins for stellate sturgeons were similar or slightly larger than the values reported for the respective parameters for other species of sturgeon like Acipenser ruthenus and Acipenser baerii: head 21±4 % (21±2 %); viscera 9±3 % (9.2±0.6%); skin 13±3% (14±2.75%); fins 3.7±1% (3.9±0.25%).

At sturgeon Acipenser gűldenstaedii raised in natural environment, fully grown to maturity, the ponderal anatomy is much different from the one year old culture of sturgeon, the head 18.7 %, skin 3.7%, the body cartilage and dorsal tail 4.0% fins 2.2 %, values significantly lower. For consumption we use only certain parts of the fishes body. The consuming value of the culture sturgeon may rise to 81 % if the fish is exploited to the point where only the inedible parts are removed (viscera, gills, shields).At wild sturgeon the edible part reaches 85.6 % .

Chemical composition of the sturgeon meat

The nutritional value of the fish, in general and of the culture of sturgeon in particular, is conditioned by the, chemical composition of the meat and by the biological value of the main constituents (proteins, lipids, mineral salts, and vitamins).

The proteins of the muscular tissue of the sturgeon, as well as all proteins of animal origin (meat, fish, milk products, yolk of eggs) are proteins with a high biological value or complete proteins because all 8 essential amino acids are present in these proteins.

The global chemical composition for the culture of sturgeon, indicated in table 3, presented, insignificant variations from one specimen to the other. The deviation and standard error presented sub unitary values for all chemical parameters analyzed; the spread degree of the values reported to the arithmetic means was reduced, the global chemical composition being slightly influenced by the mass of the fish and the duration of refrigeration at 4˚C.

As for the experiment we carries out, the chemical composition of the fish meat was influenced by the environmental conditions offered by the recycling breeding system, the food (proteins 45%, lipids 12%) and also the mass of the examined samples as well as the preservation conditions.

The analysis of the aquatic environment in the recycling breeding system has shown normal values and for the principal physico-chemical indicators of the water.

Table 3

The global chemical composition for stellate and beluga sturgeon meat

Sturgeon species	**Fish weight g**	**Moisture g%**	**Proteins g%**	**Fat g%**	**Ash g%**
Stellate sturgeon	652.5	77.8	16.7	3.9	1.6
Beluga sturgeon	201.5	83.0	14.9	1.1	1.0

The chemical composition of the beluga sturgeons was different than the one ascertained by Barbara Jankowska 2002, in the case of the meat coming from a hybrid Siberian sturgeon (A. baerii Brandt), of 3 years of age (water 77,4 %, protein 15.2 %) and from green sturgeon (A.medirostris Ayres), 6 years old (water 75 %, protein 14.3 %) but alike values for stellate sturgeon. The fat content depends on species and age as follows: 6.4±0.47% for the hybrid sturgeon and 9.5±0.39% for the siberian sturgeon. The sum of the percentages of water and fat for the stellate sturgeon meat was 81.77% and for the beluga sturgeon meat was 84.10 %, similarly to the one ascertained for the hybrid 83.8 % and the green sturgeon 84.7 % (A. medirostris Ayres).

The proteins and ash are chemical constituents relatively constant in fish meat. The medium protein content in the culture of sturgeon was 14.98 % and 16.7% as opposed to 15.2 % in the hybrid and of 14.3 % in the green sturgeon.

pH and the nitrous extractive matter modifications of the culture sturgeon under refrigeration

Immediately after catch, the fish dies by asphyxiation an gets into autolysis. As a result out the four stages in the process of the cod meat degradation and modification of sensorial quality, the first two are due to, autolysis and the following two the bacterial activity (Huus,1976). The autolysis in the stellate sturgeon meat under preservation conditions by cooling has been identified by means of determining the pH value (table 4) during the 15 days of refrigeration.

The modifications of texture of the post-mortem muscle and of the products based on fish meat are influenced by different proteinases and transglutaminase detected in the fish muscle. In the culture of sturgeon the proteolytic activity of tisulare and digestive enzymes and of the enzymes secreted by the contamination microflora was assessed by monitoring the low levels of non-protein nitrogen, aminic nitrogen and ammoniacal nitrogen during the entire refrigerated storage time (15 days).

The data referring to the accumulation of nitrogen compounds with a small molecular mass are presented in the table 4.

Table 4

Effect of the refrigerated storage duration on the nitrogen fractions and pH in the muscle of the culture sturgeon

Sample/ Species	**Time storage**	**pH**	**Total nitrogen**	**Non-protein nitrogen**	**Aminic nitrogen**	**Ammonia-cal nitrogen**
	days	upH	g%	mg%	mg%	mg%
Stellate sturgeon						
1	Initial	7.10	2.72	295	101.3	18.18
2	3	6.80	2.73	355	139.0	22.54
3	6	6.70	2.60	389	184.0	23.58
4	8	6.65	2.65	405	220.0	24.11
5	10	6.60	2.71	426	251.8	27.20
Beluga sturgeon						
1	Initial	7.02	2.26	281	71.5	18.03
2	5	6.74	2.41	299	91.8	20.48
3	10	6.71	2.45	313	100.0	20.94
4	12	6,71	2.47	367	156.0	23.68
5	15	6.70	2.59	412	175.0	26.85

The nitrous extractive matter represents between 9-18 % from the total nitrogen in teleosteen fishes. The most important components of this fractions are

volatile bases (ammonia and trimethylamine), the creatine, free aminoacids, nucleotides and purine bases and with cartilaginous fishes, urea.

The concentrations of non-protein nitrogen that was determined by us at the culture stellate sturgeon immediately after catch indicated 295 mg%, which represented approximately 11% of total nitrogen (table 4). Thus, the longer the duration of fish preservation through cooling, the higher the quantity of non protein nitrogen, so that in 10 days of preservation in cold air at 4^0C, the fish reaches the weight of 426 mg%. Non-protein nitrogen from beluga sturgeon one year old, immediately after the catch represented 12.43% from the total nitrogen, a level which is situated inside the variation interval, indicated for teleosteen fishes (9 – 18%). In fish, in general, the composition of the non-protein nitrogen differs from species to species and within the same species with the siye of the fish, the fishing season and the type of muscle.

The level of aminoacids in the culture stellate and beluga sturgeon meat increases, the longer the duration of preservation. The initial concentration of free aminoacids for stellate sturgeon – 101.3 mg% and for beluga – 71,5 mg% is close to the value reported for the shark (100 mg%), and cod fish (75 mg%) (Huus, 1995).

The accumulation of ammonia nitrogen during preservation in cold air at 4^0C, has reached the critical value of quality degradation in the 8 days of preservation for stellate sturgeon and 12 days of preservation for beluga sturgeon.

Although the fish considered a perishable food the culture stellate sturgeon as well as beluga sturgeon have shown an extended length of resistance of 8 and 12 days respectively when preserved through cooling. This stands out as an important quality for fish managers.

Conclusions

The culture stellate and beluga sturgeon analysed in this paper shows that from the point of view of its nutritional qualities and modifications suffered during preservation through cooling in air at 4^0C, it had an average weight/specimen of 652.5 g and 201,5 g respectively. Under these conditions, the fillet percentage was 39% for stellate sturgeon and 29.1% for beluga sturgeon, on the average a value similar to the ones reported for other species of sturgeons.

The chemical composition of the culture stellate sturgeon meat indicates a high content of water (77.8%), an average one of proteins (16.73%), and a low content of lipids (3.97%), the ash percentage being kept low and constant. The chemical composition of the beluga sturgeon was different: 14.95% proteins, 1.10% fat and 83.03% moisture.

The physical, chemical and biochemical modifications suffered by the culture stellate and beluga sturgeon at cooling and expressed by means of the value of nitrogen fractions, the accumulation of lactic acid, the degradation of proteins, of pH increase have led to the conclusion that the maximum duration of culture

stellate sturgeon preservation through cooling in cold air, at 4^0C is of 8 days and 12 days respectively for beluga sturgeon..

Bibliography

1. **Billard R,** (2002). *Esturgeons et caviar* Ed. Tec & Doc, Paris

2. **Bacalbaşa, N.** (1997). *Endangered migratory sturgeons of the lower Danube River and its Delta* Env. Biology of Fishes 48, Kluwer Academic Publishers, Printed in the Netherlands, pag. 201-207.

3. **Huus, H., H. (**1995). *Quality and quality changes in fresh fish*. Food And Agriculture Organization Of The United Nations, Rome

4. **Ionescu A., Zara M., Vasile A., Aprodu I., Paltenea E**., (2006) *La stabilité physico-chimique de la viande d'esturgeon de Danube (Acipenser stellatus) au congélation*, Scientific Study & Research, Vol. VII (4), ISSN 1582-540X, pag. 805-811.

5. **Ionescu Aurelia, Berza Maria, Banu C.** (1992). *Îndrumar – Metode şi tehnici pentru controlul peştelui şi produselor din peşte*. Ed. Universităţii" Dunărea de Jos", Galaţi.

6. **W.A. Johnston, F.J. Nicholson, A. Roger and G.D. Stroud**, (1994). *Freezing and refrigerated storage in fisheries*. Food And Agriculture Organization Of The United Nations, Rome

7. **Mele M, Secchiari P, Ferruzzi G, Serra A, Berni P**, (2001). *Modificazione quanti-qualitativa della composizione acidica intramuscolare in ibridi di storione sottoposti a differenti integrazioni alimentari di acido oleico e linoleico.* Agric.Med.

8. **Paltenea E., Georgescu R., Patriche N.**, (2000) – *Studies on the activity of certain digestive enzymes at Acipenser stellatus Pallas.* Fish and Crustacean Nutrition Metodology – Proc. EIFAC Workshop, Szarvas, Hungary, pp.99.

9. **Paltenea E., Talpeş M., Patriche N.,** (2003) - *Evaluarea caracteristicilor organoleptice şi fizico-chimice a cărnii de păstrugă.* Simpozion "Euroaliment 2003", Galaţi, pag. 679-685. ISBN 973 – 8316 – 68 – 5.

10. **Zara, M., Ionescu A., Paltenea E., Vasile A., Aprodu I.** (2005). *Sensorial and microbiologocal quality evaluation of post-mortem great sturgeon,* Euro-Aliment 2005, Galati.

***AOAC Official Method of Analysis Number 996.05, 1996 Protein Crude – Automated Kjeldahl Method

EVALUAREA CALITĂŢII CĂRNII STURIONILOR DE CULTURĂ ÎN STARE PROASPĂTĂ ŞI REFRIGERATĂ

PALTENEA ELPIDA *, TALPEŞ MARILENA *, IONESCU AURELIA **, ZARA MARGARETA **, VASILE AIDA **, MOCANU ELENA *

**Institute of Research and Development for Aquatic Ecology, Fishing and Aquaculture Galati, România*

***Faculty of Food Science and Engineering Galati, "Dunărea de Jos" Galati, România*

Carnea de sturion prezintă calităţi nutritive deosebite, conferite de conţinutul ridicat de proteină, lipide cu grad mare de nesaturare, vitamine şi substanţe minerale importante.

Studiul nostru a avut ca obiective aprecierea valorii tehnologice şi de consum a cărnii de păstrugă şi morun de cultură prin studierea caracteristicilor chimice, fizice şi biochimice, stabilirea calităţii nutritive a cărnii acestora şi aprecierea pierderilor de calitate pentru carnea de sturion în timpul refrigerării şi depozitării în regim de refrigerare.

Pentru evaluarea modificărilor survenite în carnea de sturioni (Acipenser stellatus Pallas şi Huso huso Linnaeus) în condiţii de conservare prin refrigerare, au fost recoltate probe care au fost păstrate la temperatura de refrigerare şi analizate periodic, până la apariţia indicatorilor de degradare ai cărnii.

În urma analizelor efectuate s-a determinat timpul maxim de păstrare a păstrugii şi morunului de cultură în regim de refrigerare în aer rece, la 4^0C.

Cuvinte cheie: sturioni de cultură, păstrugă, morun, proteine, aminoacizi, fracţii azotoase, refrigerare